THE UNIVERSITY OF THE SOUTH PACIFIC

School of Information Technology, Engineering, Mathematics, and Physics

CS311: Operating Systems

Short Test 1 Semester 1, 2023

Mode: Face to Face

Duration of Exam: 50 minutes

Reading Time: Extra 5 minutes

Writing Time: 50 minutes

Instructions:

There are 11 Short Answer Questions. Weighting: 10% | Total Mark: 35

Calculators are allowed. This is a closed book exam.

Learning Outcomes

I. Evaluate various techniques for efficient management of operating system resources.

Student ID:	**Tutors Solution & Marking Guide**
Student Name:	_____
Campus:	_____

Student ID & Name:

Question 1 **2 Marks**

Explain the relationship between Computer Hardware, Application Software & Operating Systems with the use of a diagram?

Hardware: Physical Components of a computer system example: Keyboard, CPU, RAM (1/2 Mark)

Application Software: Programs designed to be used by end users such as Microsoft Office, Browsers which are either General Purpose or Special purpose software's. (1/2 Mark)

Operating Systems: System software which Interacts between the Hardware and Applications. Examples include Windows 11, Unix, Linux, Android, iOS. (1/2 Mark)

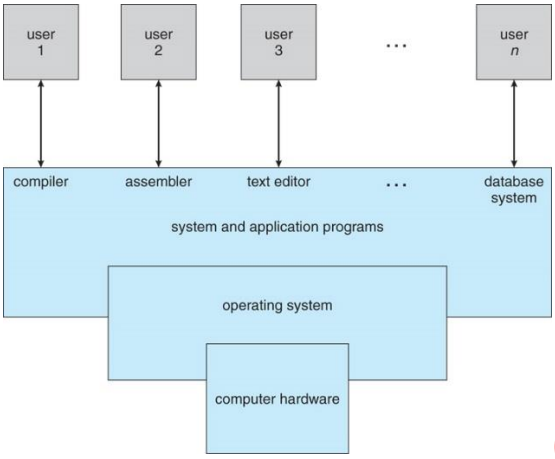

(1/2 Mark for diagram: Answers may vary: Discretionary)

Question 2 **3 Marks – (1/2 Mark each)**

Identify whether the following instructions runs on a **Kernel Mode** or a **User Mode**.

a) Generate a trap instruction: ___ User Mode/Kernel_____
b) Remove a process from memory: ___ Kernel Mode/User____
c) Turn off interrupts: ___ Kernel Mode____
d) Read system time: ___ User Mode_____
e) Adjusting the clock: ___Kernel Mode____
f) Context Switching: ___Kernel Mode_____

Student ID & Name:

Question 3 **2 Marks**

What Interface is used by the Operating System to interact with application programs for providing services such as audit logs and security. How is this interface different from interacting with the Users?

____Operating system uses Systems Calls(1/2 Mark) which has an Application Programming Interface(API) (1/2Mark) for providing services. Interaction with users are using Command Line Interface(CLI)(1/2 Mark) or Graphical User Interface(GUI) (1/2 Mark)

Question 4 **5 Marks**

Compare and contrast between a Monolithic structure and Layered structure. Discuss in terms of layers, speed, security, debugging and updates. (1/2 Mark Each)

Details	Monolithic Structure	Layered Structure
Layers	3 Layers: Application, Monolithic & Hardware layer	6 Layers – User Program, I/O Buffer, Process Management,Memory Management, Scheduling, Hardware
Speed	Faster as user program and kernel are in the same shared memory	Slower in comparison as it needs to traverse with all 6 layers therefore performance degrades.
Security	If one services fail, the entire OS fails	More secure as each layer is different and all debugging happens only at Hardware Layer
Debugging	Complicated as memory space is shared therefore prone to errors.	Easy Debugging as layers are discrete. If an error happens in the CPU scheduling layer, the developer may only debug that layer.
Updates	Entire OS needs to be changed for any updates to occur.	Allow upgrades without changing entire OS.

Student ID & Name:

Question 5 **1.5 Marks**

Explain the concept illustrated in the diagram below using at least two trigger points?

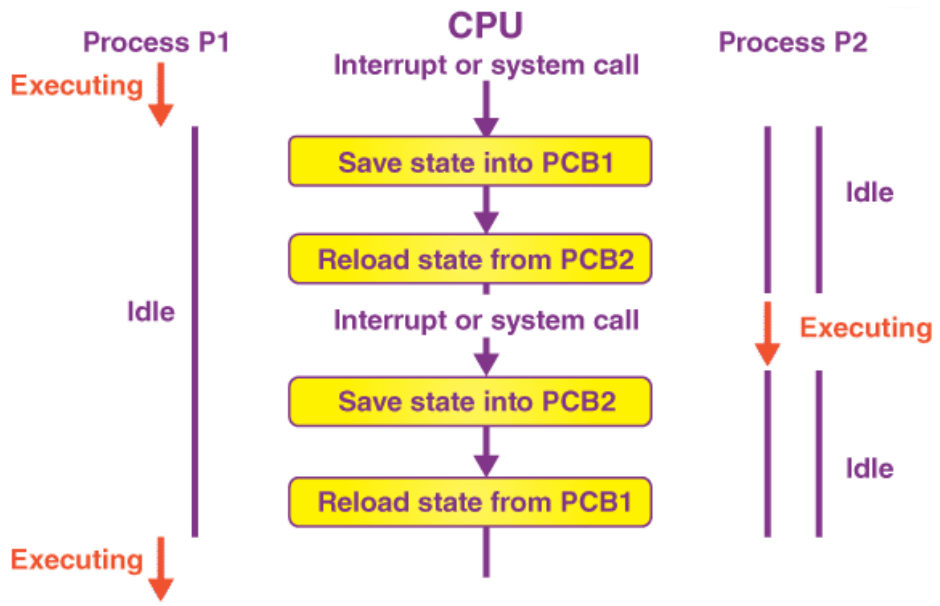

- ___The concept illustrated in Context Switching (1/2 Mark) When CPU switches to another process, the system must **save the state** of the old process and load the **saved state** for the new process via a **context switch.**

  The trigger points are: (1/2 Mark for any two listed below)

- **Interrupts:** The CPU requests the data to be read from a disk. In case there are interrupts, the context switching would automatically switch a part of the hardware that needs less time to handle the interrupts.

- **Multitasking:** Context switching is the characteristic of multitasking. They allow a process to switch from the CPU to allow another process to run. When switching a given process, the old state gets saved so as to resume the execution of the process at the very same point in a system.

- **Kernel/User Switch**: It's used in the OS when it is switching between the kernel mode and the user mode

Student ID & Name:

Question 6 **4 Marks – (1/2 MarK Each)**

The Inter-Process communication uses two models: Message Passing & Shared Memory.

I. Label the Diagram below with the appropriate model of IPC.

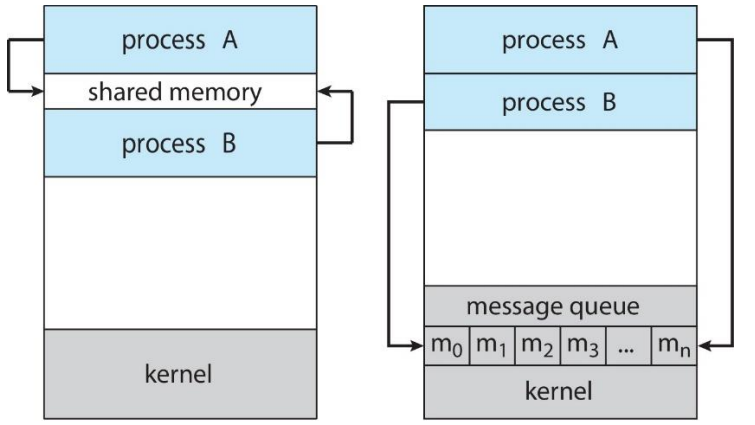

Shared Memory | Message Passing

II. Identify the Model using the description below:

Description	Model of IPC
A Kernel (system calls) is used to communicate and establish a link.	Message passing & Shared Memory
Established a communication link between two processes and send/receive messages in a queue.	Message Passing
Web Browser, Web Server, Chat, Emails are example of this Model.	Message Passing
File Server, Client Server architecture in LAN are examples of this Model.	Message Passing
Communicating processes reside on the same machine as the communicating processes share a common address space.	Shared Memory
Distributed environment where communicating processes reside on remote machines connected through a network.	Message Passing

Student ID & Name:

Question 7 **2 Marks**

Use the program below to answer the question:

export OMP_NUM_THREADS=5

```c
#include <omp.h>
#include <stdio.h>
#include <stdlib.h>

int main(int argc, char* argv[])
{
    #pragma omp parallel
    {
        printf("All the best from Thread ID = %d\n",
            omp_get_thread_num());
    }
}
```

i. Write the command to compile the C program in Linux OS where Filename is Test.c (1 Mark)
gcc Test.c -o Test -fopenmp

ii. What is the output of the program? (1 Mark)
All the best from Thead ID = 0
All the best from Thead ID = 1
All the best from Thead ID = 2
All the best from Thead ID = 3
All the best from Thead ID = 4

Question 8 **2 Marks**

Use the program below to answer the question

```c
#include <stdio.h>

int main() {
    fork();
    printf("Hello Students\n");
    fork();
    printf("This is a test\n");
    fork();
    printf("All the Best\n");
    return 0;
}
```

i. Write the command to compile & execute the C program in Linux OS where Filename is Test.c (1 Mark)
gcc Test.c -o Test
./Test

ii. What is the output of the program? (1 Mark) 2^n
Hello Students
Hello Students
This is a test
This is a test
This is a test
This is a test
All the Best
All the Best
All the Best
All the Best
All the Best
All the Best
All the Best
All the Best

Student ID & Name:

Question 9 **3 Marks**

Describe the following terms: (1/2 Mark Each)

i. Thread
   - A thread refers to a single sequential flow of activities being executed in a process;
   - A Thread is a segment of a process which has Program counter, stack, register sets
   - A thread is a lightweight process which executes a series of instructions.

ii. Dispatch Latency
   - the amount of time it takes for a system to respond to a request for a process to begin operation.
   - The time value of a context switch

iii. Mutex
   - Mutual exclusion: which means at any given point in time, only one process is allowed to enter and run into the critical section of a program.

iv. Parallelism
   - Parallelism is the ability to execute independent tasks of a program in the same instant of time or simultaneously.

v. Starvation
   - It is a problem when the low-priority process gets jammed for a long duration of time because of high-priority requests being executed.
   - When a short process waits for a longer process to finish before it can be scheduled.

vi. POSIX
   - Portable Operating System Interface: Pthreads are portable meaning regardless of the architecture, the program output will be the same thus portability.

Student ID & Name:

Question 10 **2 Marks** : (1/2 Mark Each)

Label the Diagram of the Process State as shown below:

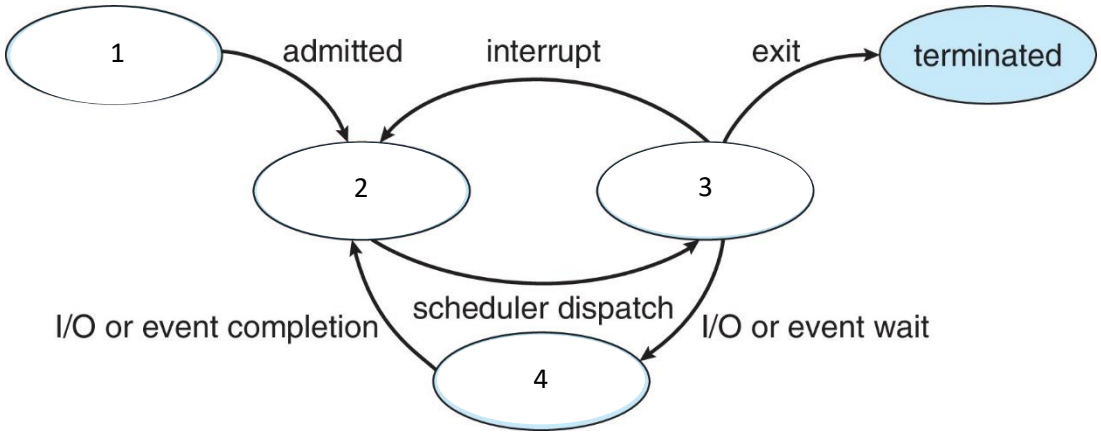

1. __New_____ 2. _____Ready___ 3. ____Running____ 4. _____Waiting__

Student ID & Name:

Question 11 **8.5 Marks**

The following questions are based on Non-Preemptive Scheduling and decisions are to be made based upon the processes at the time of queue.

Process	Burst Time (ms)	Arrival Time (ms)	Completion Time (ms)	Turnaround Time (ms)
P1	5	3.5		
P2	4	0.0		
P3	2	1.5		

Using Shortest Job First (SJF) Algorithm:

A. Draw a Gantt Chart. (2 Marks)

P2	P2	P2	P2	P3	P3	P1	P1	P1	P1	P1
1	2	3	4	5	6	7	8	9	10	11

B. Calculate the Completion Time & Turnaround Time for each process. (Fill in the Table Above) (1.5 Marks)

Process	Completion (ms)	Turnaround Time (ms)
P1	11	11-3.5=7.5
P2	4	4-0=4
P3	6	6-1.5=4.5

C. What is the Average Turnaround Time using SJF Algorithm? (1/2 Mark)

7.5 + 4 + 4.5 = 16 / 3 = 5.33ms

D. Assume the CPU is left idle for the first 2 milliseconds and then SJF scheduling is used. Draw the Gantt Chart & Calculate the Average Completion Time. (3 Marks)

		P3	P3	P2	P2	P2	P2	P1	P1	P1	P1	P1
1	2	3	4	5	6	7	8	9	10	11	12	13

Average Completion Time = (13 + 8 + 4) / 3 = 8.33ms

Student ID & Name:

E. Compare the Average Completion Time for Part B & D. Which one is the optimal scheduling algorithm and why? (1.5 Marks)

The optimal scheduling algorithm depends on the criteria as follows:

- Maximum Throughput
- Maximum CPU Utilisation
- Minimum Completion Time
- Minimum Turnaround Time
- Minimum Waiting Time

Part B has an Average Completion Time of (11+4+6)/3 = 7ms whereas Part D has an Average Completion Time of 8.33ms therefore for optimal , we choose the minimum waiting time which would be Part B (7ms).

End of Short Test